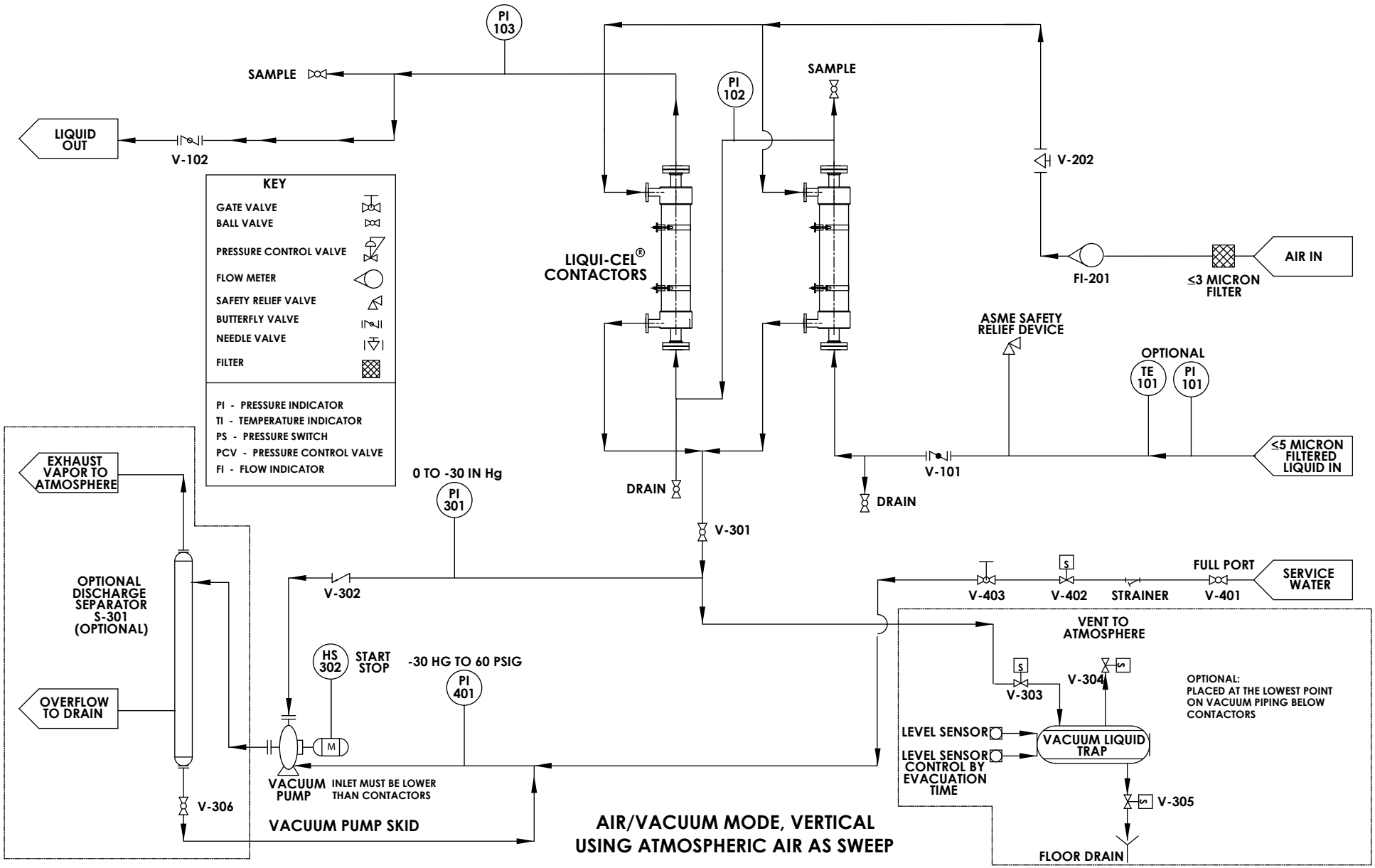
PI 103
SAMPLE
LIQUID OUT
V-102
PI 102
SAMPLE
V-202
KEY
GATE VALVE
BALL VALVE
PRESSURE CONTROL VALVE
FLOW METER
SAFETY RELIEF VALVE
BUTTERFLY VALVE
NEEDLE VALVE
FILTER
PI - PRESSURE INDICATOR
TI - TEMPERATURE INDICATOR
PS - PRESSURE SWITCH
PCV - PRESSURE CONTROL VALVE
FI - FLOW INDICATOR
LIQUI-CEL® CONTACTORS
FI-201
≤3 MICRON FILTER
AIR IN
ASME SAFETY RELIEF DEVICE
OPTIONAL
TE 101
PI 101
≤5 MICRON FILTERED LIQUID IN
V-101
DRAIN
DRAIN
V-301
0 TO -30 IN Hg
PI 301
EXHAUST VAPOR TO ATMOSPHERE
OPTIONAL DISCHARGE SEPARATOR S-301 (OPTIONAL)
OVERFLOW TO DRAIN
V-306
V-302
HS 302
START STOP
-30 HG TO 60 PSIG
PI 401
M
VACUUM PUMP
INLET MUST BE LOWER THAN CONTACTORS
VACUUM PUMP SKID
V-403
V-402
STRAINER
FULL PORT
V-401
SERVICE WATER
VENT TO ATMOSPHERE
V-303
V-304
OPTIONAL:
PLACED AT THE LOWEST POINT ON VACUUM PIPING BELOW CONTACTORS
LEVEL SENSOR
LEVEL SENSOR CONTROL BY EVACUATION TIME
VACUUM LIQUID TRAP
V-305
FLOOR DRAIN
AIR/VACUUM MODE, VERTICAL
USING ATMOSPHERIC AIR AS SWEEP